Tecle Cadena Manual 1 Ton Antiexplosion ATEX made in Japan

Características Esenciales

- 3 Años de Garantía, Servicio y Atención al Cliente en Mexico

Especificaciones Técnicas

Prueba de Carga	150% [Rated Load / Capacidad Nominal]	**Normas**	ASME B30.16 / B30.17 / ATEX Directive
Garantía	3 Year		

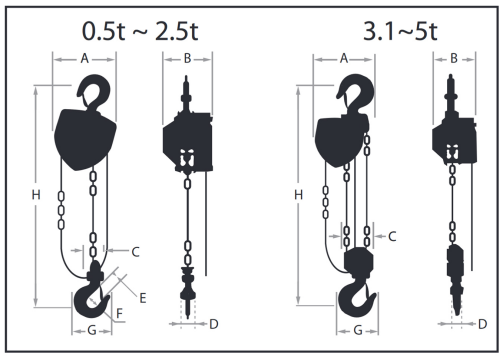

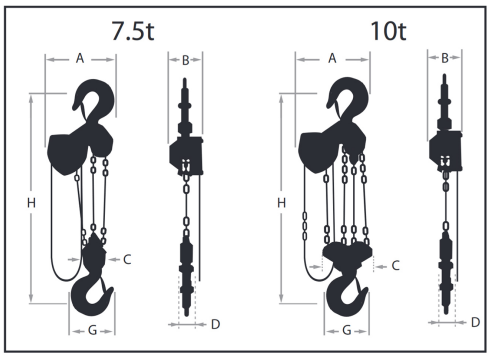

SPECIFICATIONS - PWEX H100 SPARK RESISTANT SERIES, HOOK MOUNT

Model	Max working load (lbs)	Max working load (mt)	Standard Lift (ft)	Manufacturer's Test Load	Headroom (in) "H"	Headroom (in) Lug Mount to Trolley	Hand Effort to Lift Full Working Load (lbf)	Load Chain		Hand Chain	Net Weight (lbs)
								Dia. X Pitch (mm)	No. of Falls	Dia. X Pitch (mm)	
PWEX-H100-05	1100	0.5	10	150% x Max. working load	10.83	11.7	59.5	5 x 15	1	5 x 23.5	22
PWEX-H100-1	2200	1.0	10		11.81	12.5	69.5	6.3 x 19			27
PWEX-H100-2	4400	2.0	10		14.77	15.8	88.2	8 x 24			46
PWEX-H100-3	6800	3.1	10		20.87	20.5	104.7	7.1 x 21	2		53
PWEX-H100-5	11000	5.0	10	125% x Max. working load	24.1	24.8	105.8	9 x 27			87
PWEX-H100-10	22000	10.0	10		30.52	31.4	115.7	9 x 27	4		182

DIMENSIONS (IN.) - PWEX H100 SPARK RESISTANT SERIES, HOOK MOUNT

Capacity (lbs)	A	B	C	D	E	F	G	H
1100	5.5	6.1	2.3	1.3	1.1	1.4	2.7	10.83
2200	6.3	6.3	2.5	1.4	1.2	1.7	3.5	11.81
4400	**8.5**	**7.2**	**2.6**	**1.6**	**1.5**	**2.1**	**4.5**	**14.77**
6800	9.1	6.6	4.4	2.5	1.8	2.4	5.5	20.87
11000	11.1	7.5	6.6	3.1	2.1	2.8	6.4	24.61
22000	15.2	7.5	11.8	3.9	2.8	3.4	9	30.52

Detalles del Empaque

H Altura Muerta	300 mm [11.81 in]
J Boca Gancho	30 mm [1.2 in]

Referential Images / Imágenes Referenciales
Specifications may change without notice / las especificaciones pueden cambiar sin previo aviso